Stent Fatigue Tester Project (EMPOWER) 2023-24

EMPOWER Student Association, California Polytechnic State University, San Luis Obispo, CA

Members: Pouya Behdinan, Aiden Peltier, Darren Hartono, Elias Romero, Emily Anderson, Matthew Kawashiri, Sydney Dedrick, Joshua Senoro

Project Description

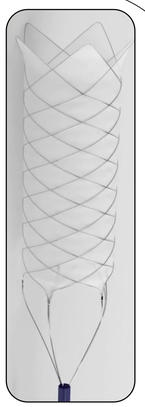

Who: This project aims to:
Develop a stent fatigue-testing system to assess the durability of stents for 380 million cycles.

What: The project involves creating a system that simulates bodily conditions to test the fatigue resistance of stents.

When: Fall 2023-Spring 2024

Why: Ensure the efficiency and safety of stents before clinical use by developing a reliable, efficient, and cost-effective testing system.

How: Leveraged extensive research, teamwork, and the expertise of advisors, focusing on designing, fabricating, and validating!

System and Team Overview

The interdisciplinary team branches into 2 main task-oriented groups:

- **Electronics and Programming:** Develop a system with sensors for force, displacement, and frequency data collection. Used LabVIEW and Python for control and analysis.

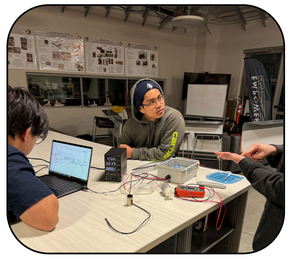

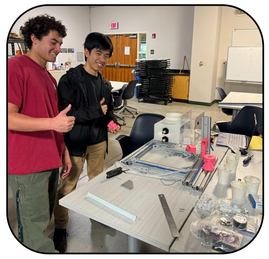

- **Fluids and Fixture:** Create a mechanism for cyclic loads, simulating body conditions. Design a fixture for precise stent alignment.

Project Milestones

Electronics/Programming

Fixture/Fluids

Fall 2023:

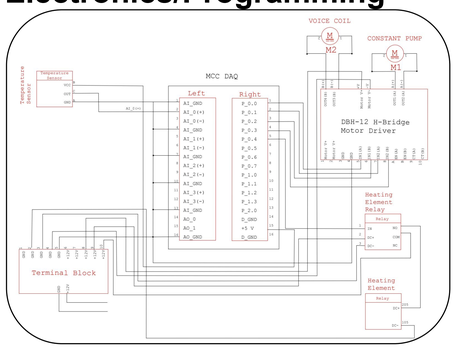

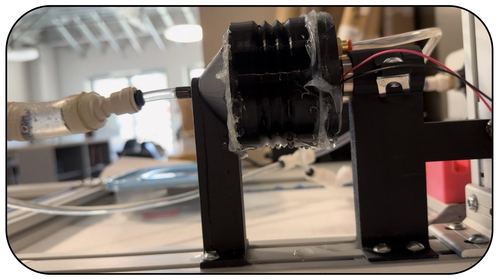

Winter 2023:

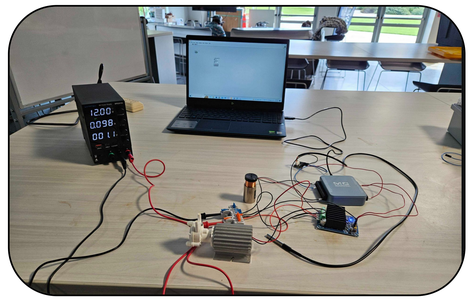

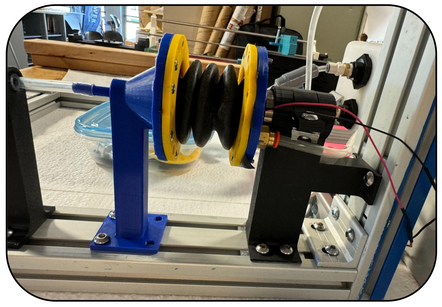

Spring 2024:

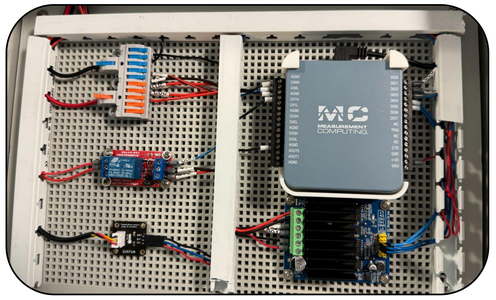

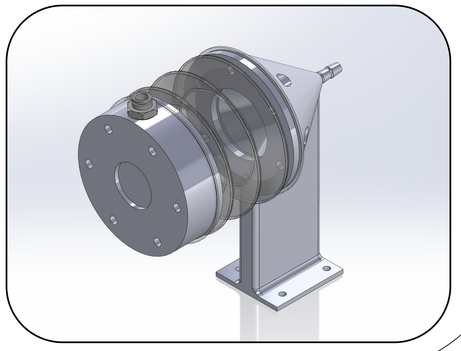

Manufacturing

- Casted with resin to create varying mock vessel diameters and lengths

- Machined with acrylic, aluminum fixturing to create final fixturing and waterproof chambers.
- 3D printed using PLA, TPU, and Resin to create molds, bellows, fixturing, and nozzles.

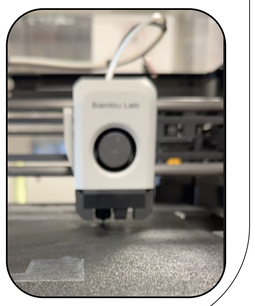

Development and Testing

- Conducted leak testing of printed/ manufactured parts.
- Fatigue tested voice coil and motor to ensure effectively of electronics.

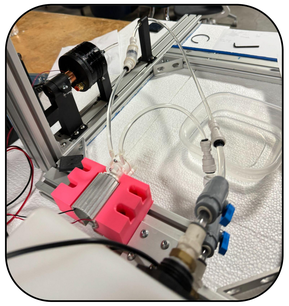

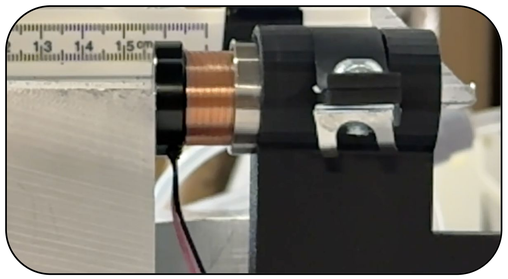

Acknowledgements

A very special thank you to Joe Emery, our industry advisor who was there every step of the way in guiding this project. Another thanks to all of the EMPOWER officers, from our FDP advisor, Jack Foxcroft who helped guide designs and Josh Gottschalk, for his invaluable help in printing parts!

EnCompass TECHNOLOGIES
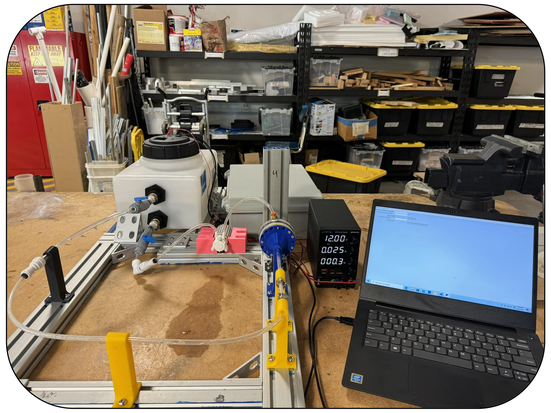
Final Product